1-WA1B

1-WA1B (2 UNIT)

WATCHES 2 BAY TANK (NO LIGHTING)

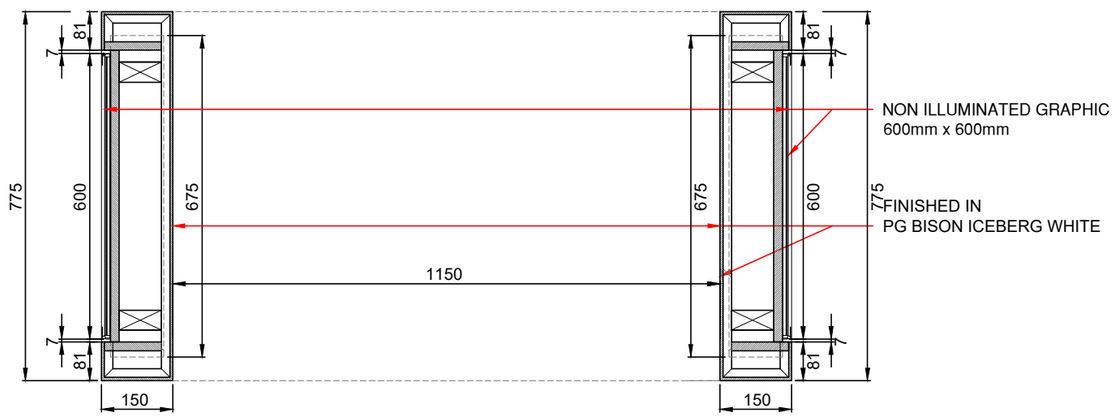

5 SECTION PLAN

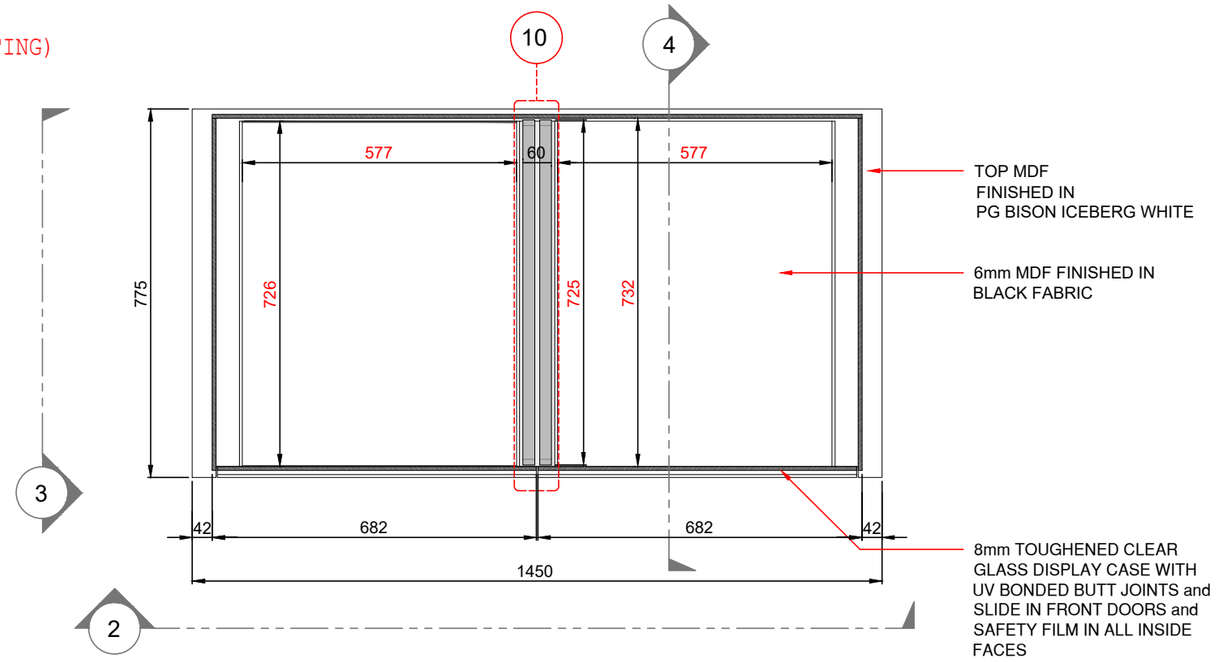

1 SECTION PLAN

WOODstyles	5		10		Client		Drawn By	OBJ	Drawing Number
	4		9				Checked	---	WS-DS-SD-DF-021
	3		8		Project	Abuja, Duty Free	Date	29/11/2021	
DOCUMENT CODE: WS-DS-SD-01	2	DSD-V1-RD- 29/11/2021	7				Scale	--	Sheets No / Location No
ISSUE DATE: JUNE 2016	1	DSD-V1-RD- 12/10/2021	6		Title	1-WA1B (2 UNIT)	Approved	Samir Bader	1
REVISION DATE: MAY 2021	N°	Date	Last revision titles						

ITEM NUMBER

LIST OF MATERIAL & CODE

1-WA1B

1-WA1B (2 UNIT)

WATCHES 2 BAY TANK (NO LIGHTING)

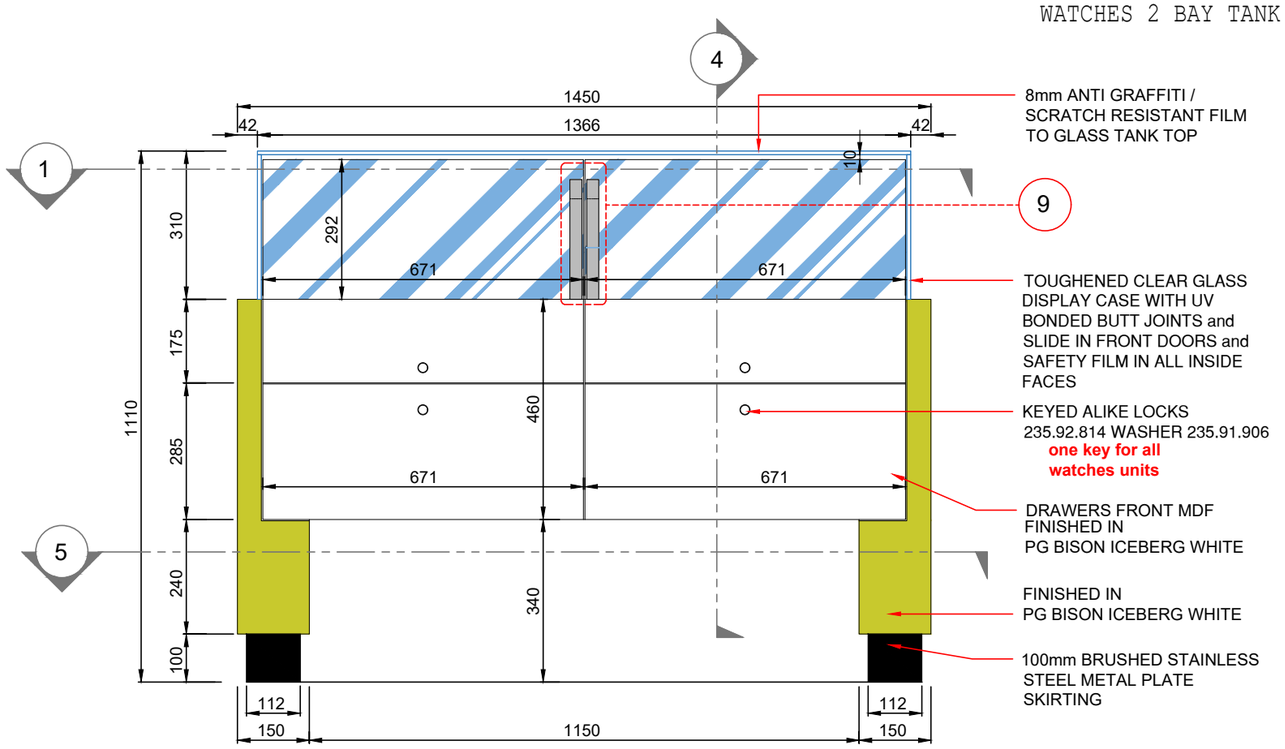

2 FRONT ELEVATION

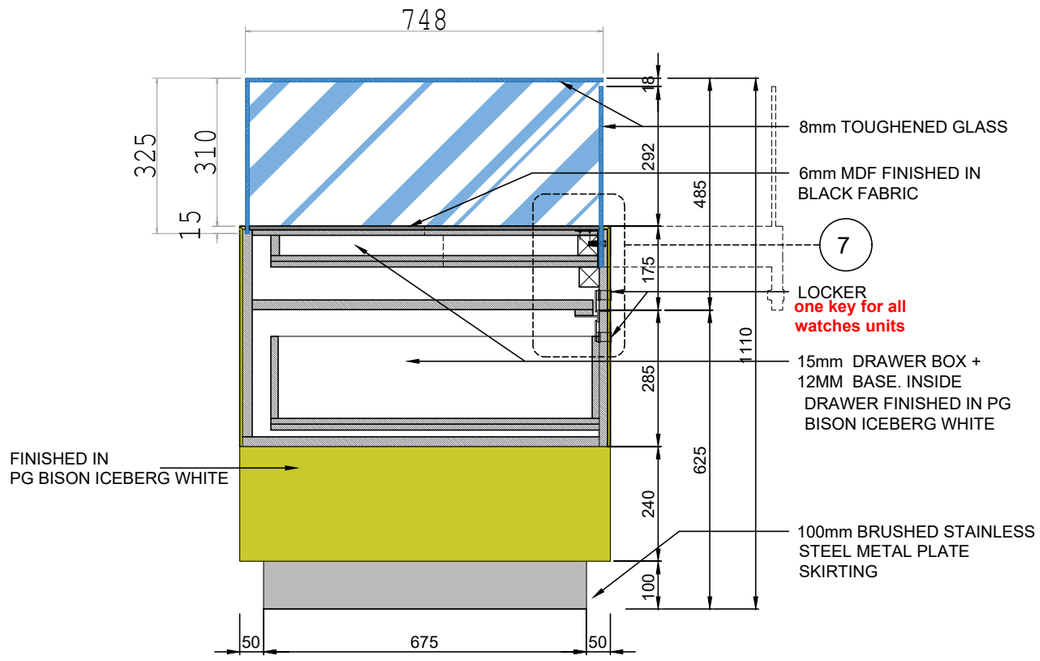

4 CROSS SECTION

LIST OF MATERIAL & CODE

WOODstyles

DOCUMENT CODE:	WS-DS-SD-01
ISSUE DATE:	JUNE 2016
REVISION DATE:	MAY 2021

N°	Date	Last revision titles		
5			10	
4			9	
3			8	
2	DSD-V1-RD- 29/11/2021		7	
1	DSD-V1-RD- 12/10/2021		6	

Client		Drawn By	OBJ
		Checked	---
Project	Abuja, Duty Free	Date	29/11/2021
		Scale	--
Title	1-WA1B (2 UNIT)	Approved	Samir Bader

ITEM NUMBER	
Drawing Number	
WS-DS-SD-DF-021	
Sheets No	Location No
2	

1-WA1B

1-WA1B (2 UNIT)

WATCHES 2 BAY TANK (NO LIGHTING)

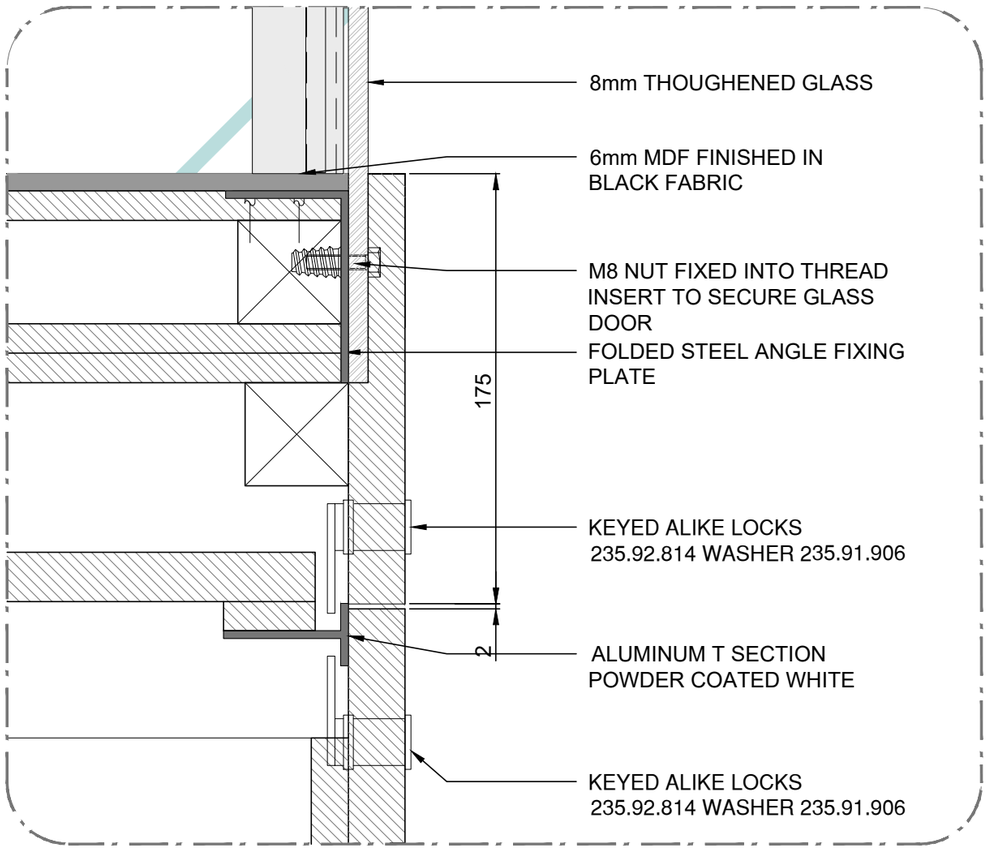

7 DRAWERS DETAIL

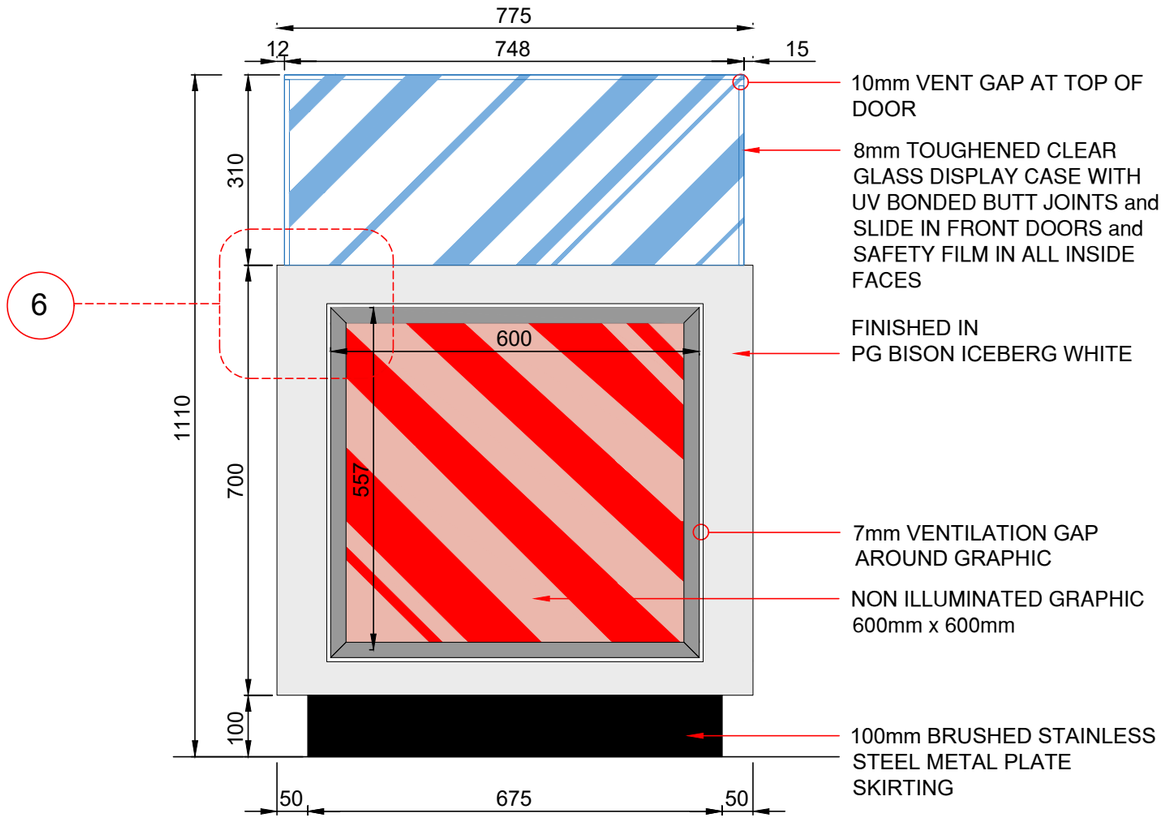

3 SIDE ELEVATION

ITEM NUMBER	
Drawing Number	
WS-DS-SD-DF-021	
Sheets No	Location No
3	

LIST OF MATERIAL & CODE

WOODstyles

DOCUMENT CODE:	WS-DS-SD-01
ISSUE DATE:	JUNE 2016
REVISION DATE:	MAY 2021

N°	Date	Last revision titles	N°	Date	Last revision titles
5			10		
4			9		
3			8		
2	DSD-V1-RD-	29/11/2021	7		
1	DSD-V1-RD-	12/10/2021	6		

Client		Drawn By	OBJ
		Checked	---
Project	Abuja, Duty Free	Date	29/11/2021
		Scale	--
Title	1-WA1B (2 UNIT)	Approved	Samir Bader

1-WA1B

1-WA1B (2 UNIT)

WATCHES 2 BAY TANK (NO LIGHTING)

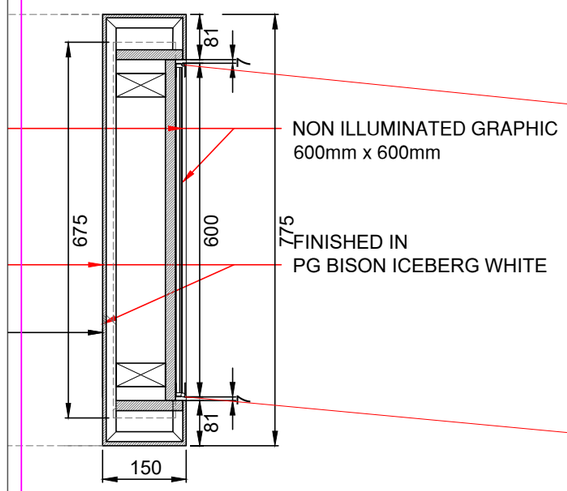

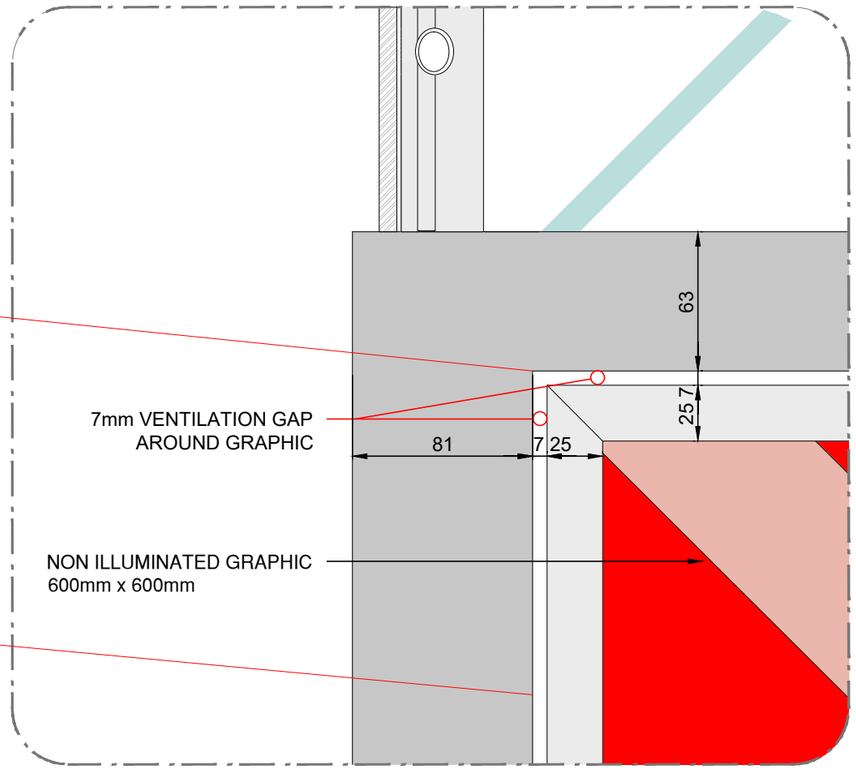

6 GRAPHIC DETAIL

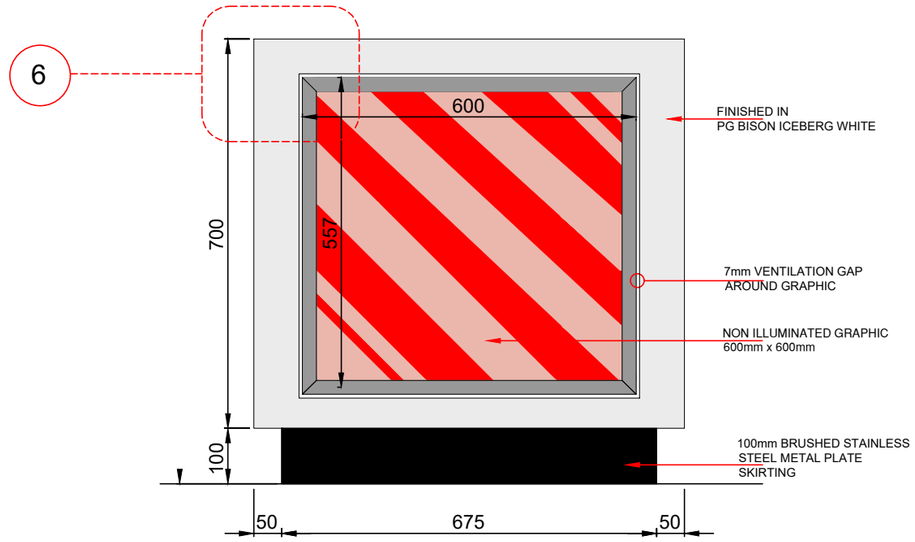

3 SIDE ELEVATION

LIST OF MATERIAL & CODE

WOODstyles	5		10		Client		Drawn By	OBJ	ITEM NUMBER
	4		9				Checked	---	Drawing Number
	3		8		Project	Abuja, Duty Free	Date	29/11/2021	WS-DS-SD-DF-021
DOCUMENT CODE: WS-DS-SD-01	2	DSD-V1-RD- 29/11/2021	7				Scale	--	Sheets No / Location No
ISSUE DATE: JUNE 2016	1	DSD-V1-RD- 12/10/2021	6		Title	1-WA1B (2 UNIT)	Approved	Samir Bader	4
REVISION DATE: MAY 2021	N°	Date	Last revision titles						